Pixelink®

A NAVITAR COMPANY

M5D

CMOS | SONY IMX250 | GLOBAL SHUTTER

Ideal for use in any laboratory or industrial setting, Pixelink cameras let you capture high-quality images with your existing microscope equipment. We will work with you to choose and integrate the optimal USB 3.0 camera for your microscopy project. Our microscope cameras and associated software are designed to offer consistent, superior quality image acquisition and performance.

KEY FEATURES

- 5MP CMOS
- 80 FRAMES Per Sec.
- 3.45µm
- 11.1mm
- Sensor Size 2/3"
- 12 BIT
- COLOR
- MONO
- USB 3
- USB3 VISION

TYPICAL APPLICATIONS

Live Cell Imaging
Microbiology
Cell Analysis
Vision Correction
Packaging
Measurements
Inspection
Paint Analysis & Dirt Analysis

Pixelink® A NAVITAR COMPANY

1.833.247.1211 (North America)
+1.613.247.1211 (International)

info@pixelink.com
www.pixelink.com

Pixelink® A NAVITAR COMPANY

M5D KIT

TECHNICAL SPECIFICATIONS

SENSOR

Sensor	Sony IMX250
Type	CMOS Global Shutter
Resolution	5.01 MP (2448 x 2048)
Pixel Pitch	3.45 µm x 3.45 µm
Active Area	11.1 mm diagonal

PERFORMANCE SPECIFICATIONS

FPN	< 0.03% of signal
PRNU	< 0.4% of signal
Dynamic Range	70 dB
Bit Depth	8 or 12-bit
Color Data Formats	Bayer 8, Bayer 12 Packed, Bayer 16 & YUV422
Mono Data Formats	Mono 8, Mono 12 Packed & Mono 16

FRAME RATES

Resolution	Free Running
2448 x 2048	79.8 fps
1280 x 1024	158.9 fps
640 x 480	325.8 fps

Frame rates will vary based on host system and configuration

*Above calculations based on fixed frame rate mode

INTERFACES

Interface | Date rate	USB 3.0 | Micro-B | 5Gbps
Trigger Mode 0	Software

MECHANICALS

Dimensions (mm)	80.88 x Ø54.01 (without lens mount)
Weight (g)	218.5 (without optics)
Mounting	C-Mount

ENVIRONMENTAL & REGULATORY

Compliance	FCC, CE & RoHS
Shock & Vibration	300 G & 20 G (10Hz - 2KHz)
Operating Temperature	0°C to 50°C
Storage Temperature	-45°C to 85°C

SOFTWARE

Pixelink Capture	Capture, control, measure & operate
Pixelink SDK	Software Development Kit
Pixelink µScope	Acquisition, analysis & reporting
3rd. Party U3V Vision Applications	

COMPUTER & OPERATING SYSTEM

	Windows	Linux x86	Linux ArmV7	Linux ArmV8
Processor	Intel i5 or better	Intel i5 or better	Arm7 (32 bit)	Arm8 (64 bit)
Memory	4GB recommended	4GB recommended	2GB	2GB
Hard Drive Space	150 MB	150 MB	50 MB	50 MB
Operating System	Windows 7/8/10	Ubuntu 14.04/16.04 Desktop	Ubuntu 14.04/16.04	Ubuntu 14.04/16.04

POWER REQUIREMENTS

Voltage Required	5V DC (from USB connector)

AVAILABLE CONFIGURATIONS

M5DC-CYL
M5DC-KIT-CYL
M5DC-SE-CYL
M5DC-PRO-CYL

M5DM-CYL
M5DM-KIT-CYL
M5DM-SE-CYL
M5DM-PRO-CYL

Housing
CYL = Cylindrical Case

Software Included
KIT = µScope Essentials
SE = µScope Standard
PRO = µScope Professional

Pixelink® A NAVITAR COMPANY

1.833.247.1211 (North America)
+1.613.247.1211 (International)

info@pixelink.com
www.pixelink.com

MECHANICAL DRAWINGS & RESPONSIVITY CURVES

MECHANICAL DRAWINGS

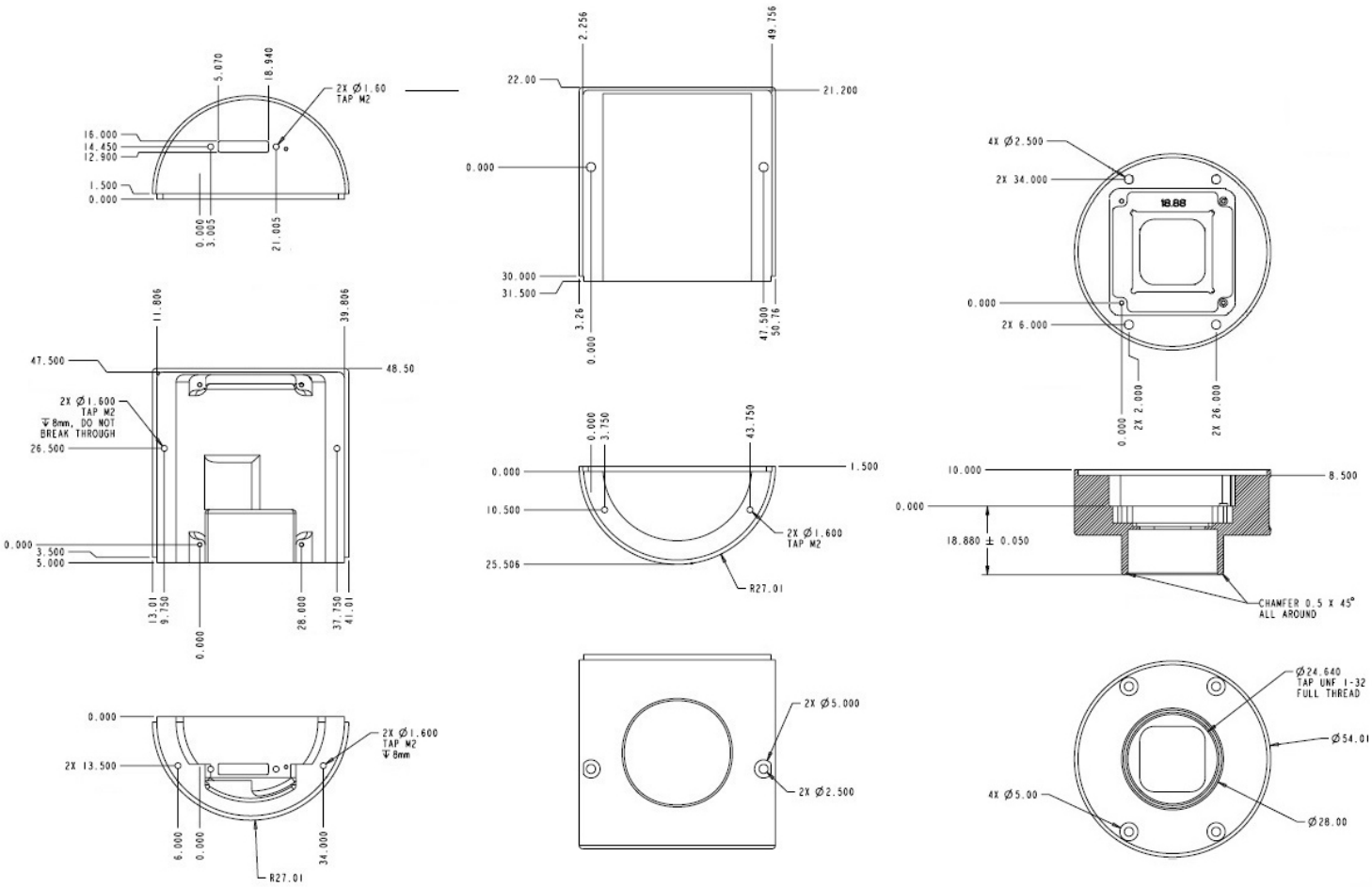

RESPONSIVITY CURVE - COLOR

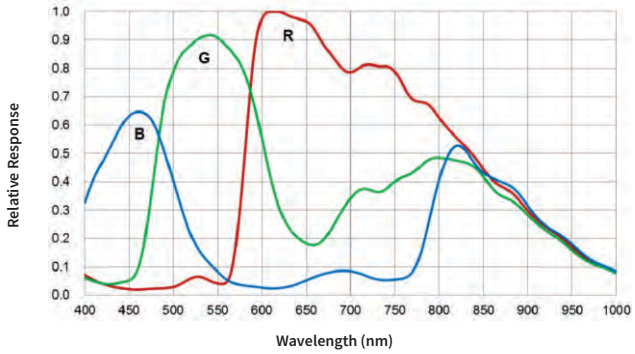

RESPONSIVITY CURVE - MONO

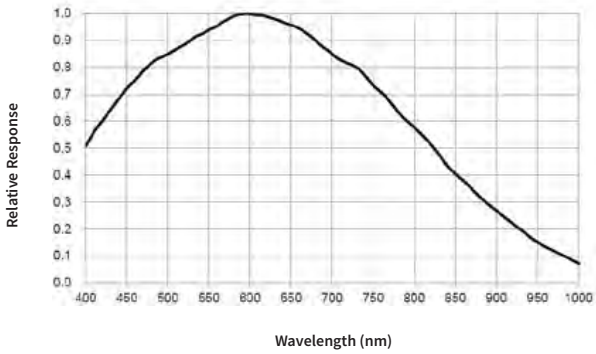

PIXELINK'S INDUSTRY LEADING SOFTWARE

PIXELINK µSCOPE

Pixelink µScope is a software tool developed for the Microscopy marketplace. It gives users the ability to quickly and easily capture, measure and enhance images. In addition to this it can also correlate image data effectively and output the data in a format that can be further analysed by other software packages.

Pixelink µScope Essentials (ES) Software is an easy-to-use robust image capture tool optimized for productivity. **Pixelink µScope Standard (SE)** Software has added features, making it a highly productive image capture tool for microscopy. **Pixelink µScope Pro (PRO)** Software is for users needing more advanced tools for their microscopy requirements. This feature-rich application includes tools such as z-axis, extended focus imaging, shading correction, and reflected light subtraction.

PIXELINK SDK

Providing full control of all camera functions, the **Pixelink Software Developers Kit (SDK**) is the software package of choice for developers and system integrators who are integrating Pixelink cameras into their applications. The Pixelink SDK provides access to the full Pixelink Application Programming Interface (API) and provides sample applications, wrappers for many 3rd party controls, such as LabVIEW, along with full documentation.

The Pixelink SDK is compatible with Microsoft Windows and popular Linux platforms. When using the Pixelink SDK, developers can integrate Pixelink cameras into their custom applications with ease.

PIXELINK CAPTURE

Pixelink Capture is powerful multi-camera software application designed to configure "n" numbers of cameras and stream "n" number of cameras simultaneously in real-time high-quality video viewed in a multi-window environment. Pixelink Capture offers options for complex image enhancements such as; exposure control, filtering, frame-by-frame property changes in addition to multi-camera application testing and configuration.

Pixelink Capture also provides features to measure supporting; point, line, circle, rectangle, polyline and polygon measurements while determining pixel location. After creating spatial calibration, the user can then review and adjust before exporting the findings to an Excel spreadsheet for further analysis. Pixelink Capture also has integrated lens control (zoom & focus) for Navitar motorized lenses and accurate autofocus options for Navitar motorized fine focus mechanisms.

For more information on Pixelink µScope, the Pixelink SDK and/or Pixelink Capture visit www.pixelink.com.

Pixelink® A NAVITAR COMPANY
1.833.247.1211 (North America)
+1.613.247.1211 (International)
info@pixelink.com
www.pixelink.com